red kite

IMPORTANT! READ CAREFULLY AND KEEP FOR FUTURE REFERENCE.

Read the instructions carefully before use and keep them for future reference. The child may be hurt if you do not follow the instructions. Adult assembly required.

Instruction leaflet
Cozysleep

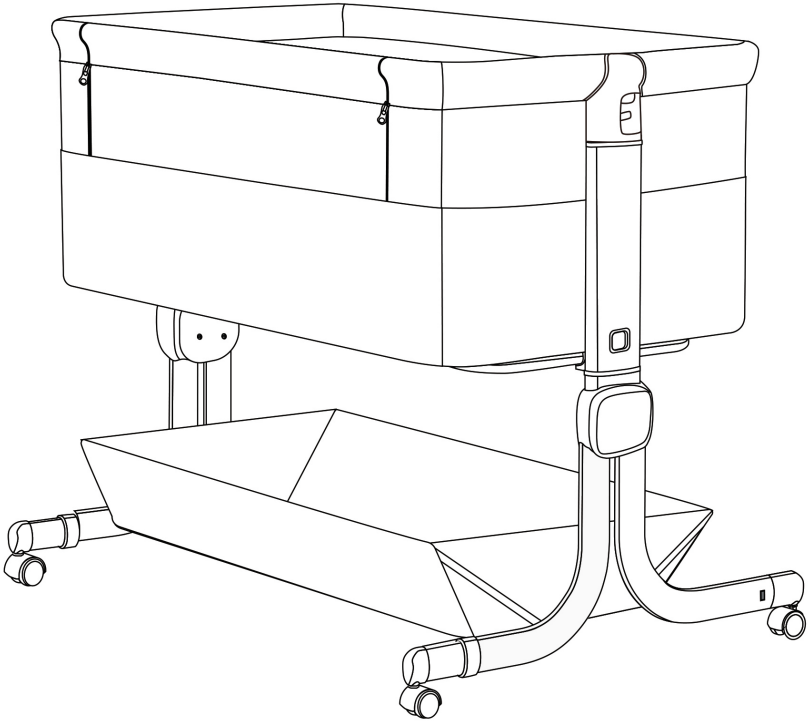

BS EN 1130 : 2019. Customer Care: www.redkitebaby.co.uk

Parts List

1. Main body
2. Carry bag
3. Basket with support tubes
4. Support tubes x2
5. Mattress and board
6. Wheels x2
7. Bed attachment anchor straps x2

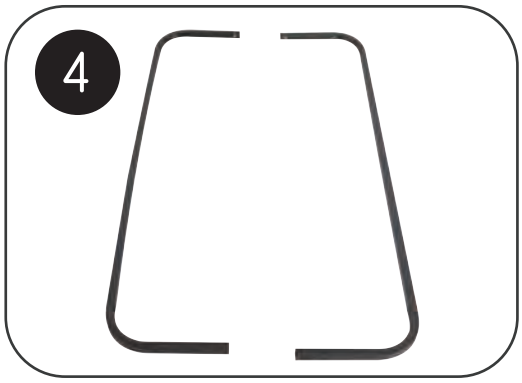



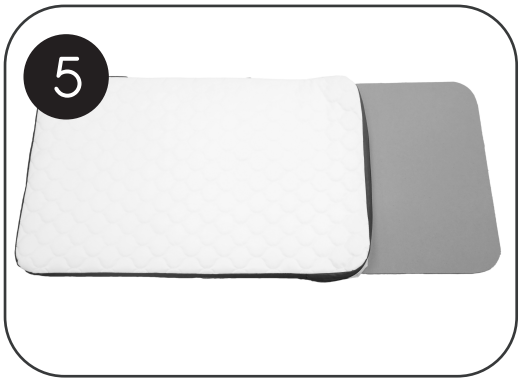









Assembly instructions



1. Push the wheels into the feet until they lock in place. Pull gently to ensure they are secure.

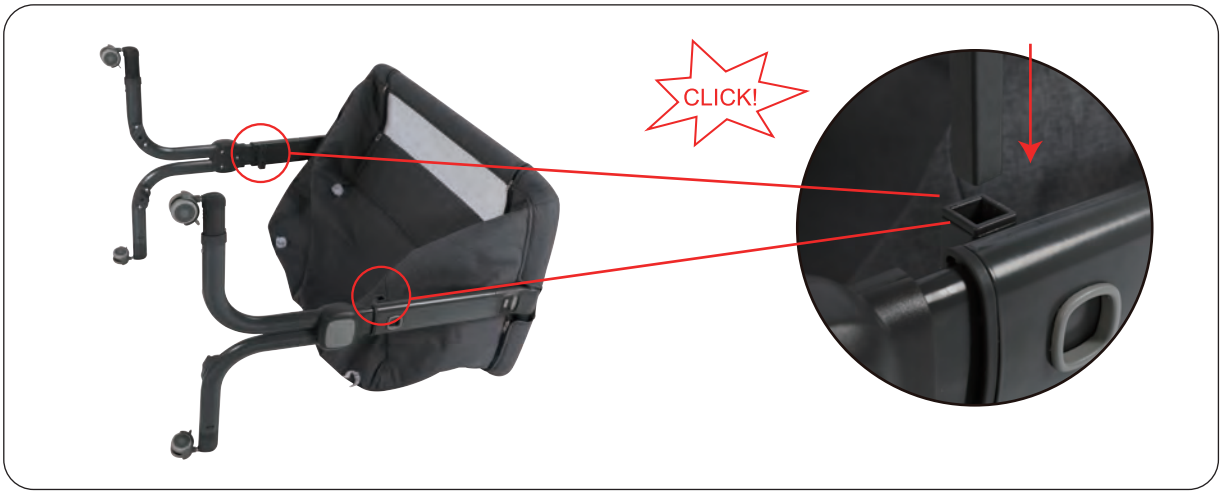

2. Insert the ends of the support tubes into the frame brackets until they lock in place.



3. Insert the basket support tubes into the brackets until they lock in place.

Assembly instructions



4. Wrap the Velcro located on the bottom of the crib fabric around the support bars.

Step : Unzip the mattress and place the board under the foam.

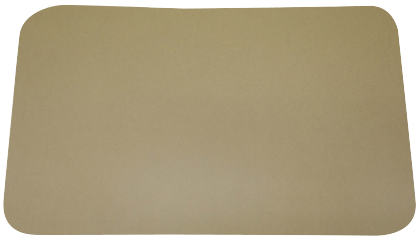





⚠ WARNING: DO NOT ADD A SECOND MATTRESS, SUFFOCATION HAZARDS.

5. Insert the mattress.



Crib Mode

6. Assembly into Crib Mode is now complete.

To adjust the height



To adjust the height, press in button 1 and then lift button 2. Select new height and release the buttons. There are 6 different heights to choose from.

Note: When adjusting the height, it is advisable to adjust one leg position at a time. Then repeat for the other side.



To operate the wheels



Use the button on the wheels to engage or release the brakes.

Note: Always have the brakes engaged when in use and and never push the crib around with a child inside.

To use the incline function in Crib mode



When not attached to a bed, the head end of the crib can be inclined to a maximum of 2 positions if desired.

Co sleeper mode



Drop side bar

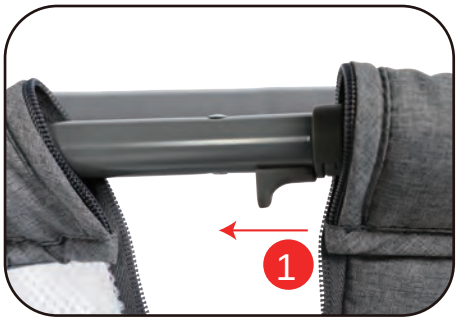

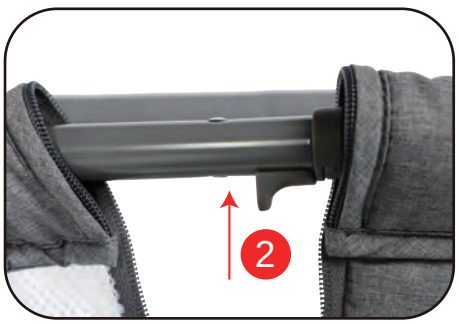



To lower the drop side bar, undo the zip. Pull the catches inwards and lift the bar upwards. Roll the bar downwards and hold in place with the elastic loop.

Note: Only lower the drop side bar when in Co sleeper mode. Never use it in Crib mode.

WARNING! Never incline an end of the crib when it is attached to a bed in Co sleeper mode. Ensure both ends of the crib are in exactly the same height position.

To secure to an adults bed

The feet can be retracted to allow the crib to be as close as possible to a bed. Push in the small silver button on the top and push the foot towards the crib.

Note: When used as a stand alone crib the feet must always be fully extended.



To secure to an adults bed

Connect one end of the bedside straps into the buckle on the side of the frame of the crib. Feed the strap under the mattress and either around the top of the mattress or around the bedframe. Connect the other end of the strap buckle. Repeat for the other side. Pull on the loose ends of the straps to take up any slack so that the crib is tight against the bed.

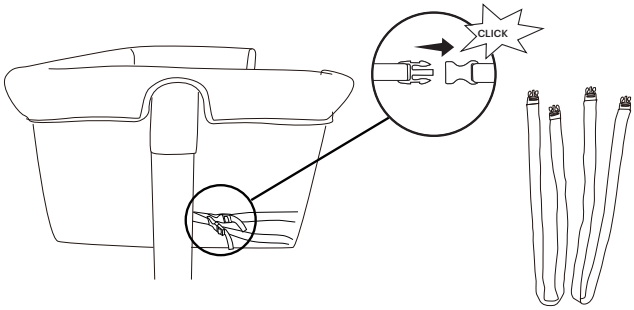

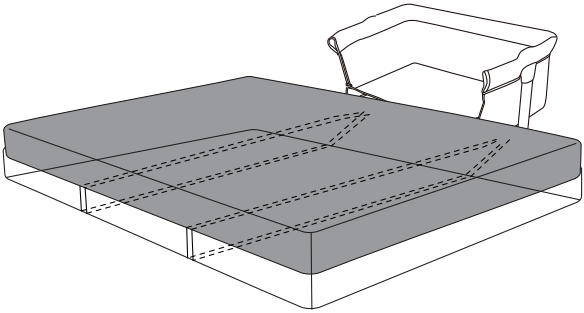

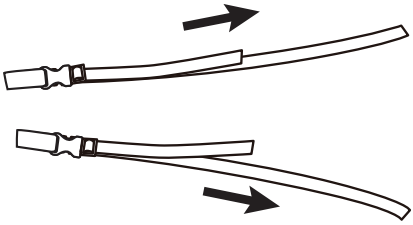

WARNING!

Before every use always check to make sure there is no space between the parents mattress and the side of the Co sleeper.

If any space is found, pull the belts firmly to tighten until there is no space left and the correct position has been restored.

Only suitable for beds with straight sides.

Not suitable for beds with round mattresses or water beds.

When the product is used in the bedside sleeping mode, it should always be fitted to the long side of the bed.

Do not fix the co sleeper to the head or bottom of the bed.

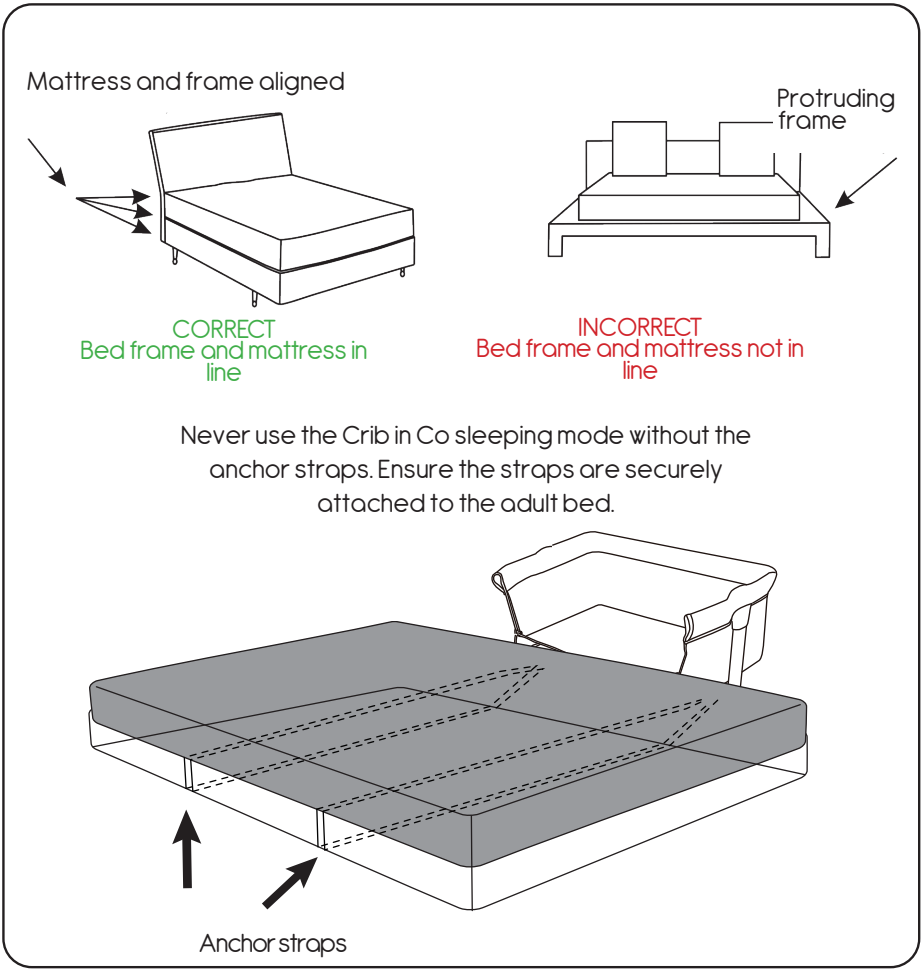

To fold for storage / transportation

Undo each of the 4 Velcro securing points on the bottom of the crib. With the crib lying on its side, remove the support tubes and basket support tubes by pressing in the small silver push pin and pulling out the tubes. Rotate one of the frame legs over so it lays on top of the crib and the other rotate under the crib. Place the crib into the storage/carry bag.

• WARNING: Do not use this product without reading the instructions.
• WARNING: Stop using the product as soon as the child can sit or kneel or pull itself up.
• WARNING: The product is intended for use by babies aged O to 5 or 6 months, weighing a maximum of 9 kg.
• WARNING: Placing additional items in the product may cause suffocation.
• WARNING: Do not place the product close to another product, which could present a danger of suffocation or strangulation, e.g. strings, blind/curtain cords, etc.
• To avoid the risk of strangulation, do not place objects that have strings inside the crib.
• WARNING: Do not use more than one mattress in the product.
• Only use the mattress provided with the product or a replacement mattress approved by Red Kite.
• WARNING: Only use the mattress sold with this crib, do not add a second mattress on this one, suffocation hazards.
• The product must always be placed on a horizontal surface. Never leave the product on a sloping surface with your baby inside.
• Do not allow other children to play near the product without adult supervision.
• WARNING: When your child is unattended with the product in "Crib Mode", always make sure that the side is raised and locked in alignment with the upper perimeter of the crib.
• All components must be fastened well and screws must be tightened properly as they may pose an entanglement and/or strangulation hazard (e.g. strings on soothers etc.) for the baby.
• WARNING: Be aware of the risk of open fire and other sources of strong heat, such as electric bar fires, gas fires, etc. in the near vicinity of the crib.
• WARNING: When not attached to the bed, the crib can be inclined by a maximum of 2 positions between one leg support and the other.
• WARNING: DO NOT USE the product in "Crib Mode" and/ or "Co Sleeping Mode" if any part is missing, damaged or broken. Contact Red Kite for spare parts and user instructions if needed.
• DO NOT REPLACE missing, damaged or broken parts with components not approved by Red Kite.
• WARNING: The fixing straps are included in the packaging. Other fastening systems must NOT be used.
• When used in the "Co Sleeping Mode" (fastened to the bed), the crib must never be inclined.
• To prevent danger of choking due to the child's head being trapped, when the crib is in the "Co Sleeping Mode" (fastened to the bed) it must be properly fastened to the parents' bed using the fixing straps.
• WARNING: When the product is used in "Co Sleeping Mode" (fastened to the bed), before placing the baby inside be sure that the fixing straps have been properly fastened to the parents' bed and tightened.
• The product must be adjacent to the parents' mattress and there must be no gaps between the lowest part on the Co Sleeping side and the mattress for adults.
choking hazard.

• WARNING: To avoid the risk of your child being strangled the attachment system to the adult's bed shall always be kept away from and out of the crib.
• Before assembling, ensure that the product and its components have not been damaged during transportation. If they have been damaged, do not use and keep out of reach of children.
• WARNING: Consult the user manual for the list of components. Examine the product regularly to make sure that there are no loose, damaged or missing parts.
• WARNING: Always use all parts needed for each configuration of use.
• Make sure that the adult using the product knows how it works, in accordance with instructions.
• WARNING: The product is ready for use only when all locking mechanisms are engaged. Make sure they are securely engaged before use.
• WARNING: When the product is being used, the wheels must always be locked.
• All operations for opening, adjusting, fastening and positioning the product must be carried out by an adult.
• Infants can suffocate on soft bedding. Avoid placing pillows or similar items under newborn babies for additional comfort during sleep.
• Do not leave anything inside the product that might reduce its depth.
• To prevent the child from being trapped, do not place the crib close to walls or obstacles.
• Do not leave any objects that might be swallowed inside the product.
• Do not make adjustments to the product when the child is in it.
• Do not move the product when the child is inside.
• Do not use the product with more than one child at a time.
• Prolonged exposure to sunlight may cause the colour of the product to vary in tone. After prolonged exposure of the product to high temperatures, wait a few minutes prior to putting your child in it.
• WARNING: During use, make sure that the parent's bedsheets, blankets, etc. do not invade the crib space.
• Keep the product out of reach of children when it is not in use.

Warnings:

WARNING! Do not use this product without reading the instructions first.
WARNING! – Stop using the product as soon as the child can sit or kneel or pull itself up.
WARNING! – Do not place additional items (e.g. toys, pillows...) in the product.
WARNING! – Do not place the product close to another product, which could present a danger of suffocation or strangulation, e.g. strings, blind/curtain cords, etc.
WARNING! – Do not use more than one mattress in the product.

Cleaning:

- Fabric may be spot cleaned by using a sponge with a mild soap and warm water solution. Leave to dry in a ventilated area away from direct sunlight. Do not dry clean, machine wash, bleach or tumble dry.
- Metal parts may be cleaned with a damp cloth. Always wipe dry.
- Clean plastic parts with a mild soap and warm water solution.
- Avoid leaving the product in direct sunlight for prolonged periods of time as this may cause fabrics to fade.

Mattress Information:

- The mattress may be spot cleaned by using a sponge with a mild soap and warm water solution. Leave to dry in a ventilated area away from direct sunlight. Do not dry clean, machine wash, bleach or tumble dry. The maximum internal size of the product the mattress is designed for is 80 x 46.5 x 4cm. There shall be no gap larger than 30mm between the mattress and the sides and the ends.

- Mattress size: 80 x 46.5 x 4 cm
- BS EN 16890 : 2017 + A1: 2021

Manufactured by The Red Kite Baby Co Ltd. 35 Lavenham Road, Beeches Industrial Estate,Yate, Bristol, BS37 5QX. UK.
Authorised Representative: Mum n Me. Triq is-Suq, Zejtun, ZTN1420. Malta.